Appendix

C

Poor Farm Ditch Conveyance Preliminary Engineering Report

Freese & Nichols, Inc.

September 2017

hdrinc.com 4828 Loop Central Drive, Suite 800, Houston, TX US 77081-2220
(713) 622-9264

Innovative approaches
Practical results
Outstanding service

POOR FARM DITCH CONVEYANCE PRELIMINARY ENGINEERING REPORT

Prepared for:

Harris County Flood Control District

September 27, 2017

Prepared by:

FREESE AND NICHOLS, INC.
10497 Town and Country Way, Suite 600
Houston, Texas 77024
713-600-6800

FREESE AND NICHOLS

Innovative approaches
Practical results
Outstanding service

POOR FARM DITCH CONVEYANCE PRELIMINARY ENGINEERING REPORT

Prepared for:

Harris County Flood Control District

STATE OF TEXAS
KALLI CLARK-EGAN
122407
LICENSED
PROFESSIONAL ENGINEER
9-27-2017

FREESE AND NICHOLS, INC.
TEXAS REGISTERED
ENGINEERING FIRM
F-2144

STATE OF TEXAS
CORY J. STULL
113321
LICENSED
PROFESSIONAL ENGINEER
9/27/17

FREESE AND NICHOLS, INC.
TEXAS REGISTERED
ENGINEERING FIRM
F-2144

[For Hydrology and Hydraulics]

Prepared by:

FREESE AND NICHOLS, INC.
10497 Town and Country Way, Suite 600
Houston, Texas 77024
713-600-6800

HCF15148

TABLE OF CONTENTS

EXECUTIVE SUMMARY ES-1

1.0 INTRODUCTION 1
1.1 Background 1
1.2 Purpose 6

2.0 EXISTING CONDITIONS 8
2.1 Existing Configuration 8
2.1.1 Channel Reach Upstream of the University Boulevard Crossing 8
2.1.2 University Boulevard Crossing 9
2.1.3 Channel Reach Between University Boulevard and Bellaire Boulevard 10
2.1.4 Bellaire Boulevard Crossing 14
2.1.5 Channel Reach Downstream of Bellaire Boulevard Crossing 15
2.2 Existing Stormwater Conditions 16
2.2.1 Design Cross-Section 17
2.2.2 Existing Cross-Section 18

3.0 TEMPORARY EXCAVATIONS 20

4.0 CHANNEL DESIGN ALTERNATIVES 22
4.1 Box Culverts 22
4.1.1 Conceptual Design 22
4.1.2 Stormwater Analysis 23
4.2 Rectangular Channel 26
4.2.1 Conceptual Design 26
4.2.2 Stormwater Analysis 28
4.3 Permanently Nailed Soil Wall 31
4.3.1 Conceptual Design 31
4.3.2 Stormwater Analysis 33
4.4 Stormwater Analysis Summary 35
4.5 Construction Considerations 38
4.5.1 Mobilization 38
4.5.2 Demolition 39
4.5.3 Concrete Placements 39
4.5.4 Procurement of Construction 39
4.5.5 Care and Control of Water 40
4.5.6 Construction Duration 41
4.6 Longterm Maintenance Considerations 42
4.7 Comparison of Probable Construction Cost Items 43

5.0 EVALUATION OF ALTERNATIVES 45

5.1 Metrics for Evaluation Criteria 45
5.1.1 Hydraulic Capacity 45
5.1.2 Project Cost 46
5.1.3 Design Life 46
5.1.4 Maintenance 47
5.1.5 Construction Duration 47
5.1.6 Impact of Construction Activities 47
5.2 Weighted Factors Analysis 48
5.3 Pairwise Analysis 49

6.0 SUMMARY AND RECOMMENDATION 52

Table of Figures

Figure 1-1: Cross-Section Depicting Constrained Portions of Poor Farm Ditch 2
Figure 1-2: Parson Brinckerhoff's Recommended Channel Configuration 4
Figure 1-3: HCFCD New Design Concept 5
Figure 2-1: View of Channel Reach Upstream of University Boulevard Crossing 9
Figure 2-2: Downstream End of University Boulevard Crossing 10
Figure 2-3: View of Transition Zone Downstream of University Boulevard Crossing 11
Figure 2-4: View of Concrete Buckling Damage Along Project Reach 12
Figure 2-5: View of Concrete Pavement Damages Along Project Reach 12
Figure 2-6: View of Temporary Stabilization Measures Along Project Reach (2015) 13
Figure 2-7: View of Temporary Stabilization Measures Along Project Reach (2017) 13
Figure 2-8: Upstream End of Bellaire Boulevard Crossing 14
Figure 2-9: Downstream End of Bellaire Boulevard Crossing 15
Figure 2-10: View of Channel Reach Downstream of Bellaire Boulevard Crossing 16
Figure 2-11: Effective Model Cross-Section 6656.935 18
Figure 2-12: Corrected Effective Model Cross-Section 6656.935 19
Figure 3-1: Factor of Safety Chart for Temporary Excavations 21
Figure 4-1: Alternative 1A Design Configuration 22
Figure 4-2: Alternative 1B Design Configuration 23
Figure 4-3: Alternative 1A Typical Model Cross-Section 24
Figure 4-4: Alternative 1B Typical Model Cross-Section 25
Figure 4-5: Alternative 2A Design Configuration 26
Figure 4-6: Alternative 2B Design Configuration 26
Figure 4-7: Alternative 2C Design Configuration 27
Figure 4-8: Alternative 2A Typical Model Cross-Section 28
Figure 4-9: Alternative 2B Typical Model Cross-Section 29
Figure 4-10: Alternative 2C Typical Model Cross-Section 30
Figure 4-11: Alternative 3A Design Configuration 31
Figure 4-12: Alternative 3B Design Configuration 31
Figure 4-13: Factor of Safety Chart for Permanent Excavations 32
Figure 4-14: Alternative 3A Typical Model Cross-Section 34
Figure 4-15: Alternative 3B Typical Model Cross-Section 35
Figure 4-16: Estimated Construction Duration 42

Figure 6-1: 3D Rendering of Alternative 3B 54

Table of Tables

Table 4-1: Summary of Maximum WSEL Increases Within or Upstream of the Study Reach (feet) 36
Table 4-2: Summary of Maximum WSEL Decreases Within or Upstream of the Study Reach (feet) 36
Table 4-3: Summary of Average WSEL Changes in Study Reach (feet) 37
Table 4-4: Approximate Level of Service of Each Alternative 37
Table 4-5: Summary of Probable Construction Cost Items 44
Table 5-1: Hydraulic Capacity Scoring Criteria 46
Table 5-2: Project Cost Scoring Criteria 46
Table 5-3: Design Life Scoring Criteria 47
Table 5-4: Maintenance Scoring Criteria 47
Table 5-5: Construction Time Scoring Criteria 47
Table 5-6: Impact of Construction Activities Scoring Criteria 48
Table 5-7: Weighted Factor Ranking of Channel Cross-Section Alternatives 49
Table 5-8: Calculation of Pairwise Weighting Factors for Evaluation Criteria 50
Table 5-9: Pairwise Ranking of Channel Cross-Section Alternatives 50

APPENDICES

APPENDIX A: EXISTING CONDITIONS
APPENDIX B: REFERENCES
APPENDIX C: GEOTECHNICAL ANALYSIS
APPENDIX D: DESIGN EXHIBITS
APPENDIX E: STORMWATER ANALYSIS
APPENDIX F: ESTIMATES OF PROBABLE CONSTRUCTION COST ITEMS (CHANNEL ONLY)
APPENDIX G: TOTAL PROJECT COSTS (ALTERNATIVES 3A AND 3B)
APPENDIX H: ENGINEERING REVIEW BOARD SUMMARY DOCUMENT
APPENDIX I: PRELIMINARY MITIGATION RESULTS

EXECUTIVE SUMMARY

On July 23, 2015, the Harris County Flood Control District (HCFCD) issued a contract for Freese and Nichols, Inc. (FNI) to develop the construction documents for improvements to HCFCD Unit Number D111-00-00 (Poor Farm Ditch).

Poor Farm Ditch is a tributary to Brays Bayou (D100-00-00) and provides drainage to approximately 1,330 acres of developed watershed. The project reach is situated between the cities of Southside Place (SSP) on the west side of the channel and West University Place (WUP) on the east side of the channel between University Boulevard and Bellaire Boulevard. On July 16, 2014, an Approved Jurisdictional Determination (AJD) was issued for this reach of Poor Farm Ditch by the United States Army Corps of Engineers (USACE). This AJD (SWG-2009-00591), which expires on July 16, 2019, indicates that Poor Farm Ditch is non-jurisdictional by USACE.

The HCFCD right-of-way (ROW) within the project reach varies from 45 feet to 80 feet. For the first 420 feet of the most downstream reach, the HCFCD ROW width varies between 60 feet and 80 feet. For the next 615 feet upstream, the ROW width is 55 feet. The ROW then narrows to 50 feet for 2,030 feet further upstream, of which 20 feet is an easement within SSP and 30 feet is a joint-use agreement with the city of WUP. For the remaining 40 feet of the project reach, the HCFCD ROW is 45 feet wide.

This portion of Poor Farm Ditch is over 55 years old, and the reinforced concrete slope pavement has deteriorated significantly and buckled at many locations. HCFCD has historically performed spot repairs to prevent an overall failure of the channel, but these repairs are only short-term solutions. Some property owners within SSP have encroached into the easement by placing fill and various structures along the channel, which has exacerbated the issues. Existing conditions are further discussed in Section 2.0. Due to the continued deterioration of the channel, a full rehabilitation is required.

Multiple efforts were undertaken to evaluate options for this full rehabilitation as described further in Section 1.0. On October 9, 2014, HCFCD held an audit committee meeting to discuss the project. There were three options discussed along with a new concept developed internally within HCFCD, which was based on the information provided as part of previous evaluations. This new concept included two 7-feet wide by 9-feet tall reinforced concrete box culverts (RCBs) placed on the outside edges of a 40-feet wide corridor with a concrete lined open channel (approximately 15-feet wide) in between.

After performing a geotechnical investigation as well as a topographic survey of the project reach, FNI identified multiple concerns associated with the culvert design concept. Discussions were held with HCFCD to present the preliminary findings and determine a path forward. HCFCD issued a contract amendment on September 9, 2016, authorizing FNI to proceed with developing a Preliminary Engineering Report (PER) to identify and evaluate channel cross-section alternatives associated with improving Poor Farm Ditch. This work was authorized under Purchase Order P250265 of the Professional Service Agreement (PSA) Number 2016-07.

This PER presents conceptual level designs for the following seven alternatives associated with improving the identified project reach of Poor Farm Ditch:

- Alternative 1A: Installation of two 7x7 RCBs separated by a rectangular open channel configuration that includes a slab on grade constructed using an excavation stabilized with temporary soil nails;
- Alternative 1B: Installation of two 7x7 RCBs separated by a rectangular open channel configuration that includes a slab on grade constructed using a vertical excavation stabilized with shoring methods;
- Alternative 2A: Cast-in-place rectangular channel constructed using a sloped excavation stabilized with temporary soil nails;
- Alternative 2B: Cast-in-place rectangular channel constructed using a vertical excavation stabilized with vertical shoring methods;
- Alternative 2C: Cast-in-place rectangular channel constructed using both sloped and vertical excavation stabilized by a combination of temporary soil nails and vertical shoring methods;
- Alternative 3A: Trapezoidal channel with reinforced concrete slope pavement anchored by permanent soil nails extending to the existing 50-feet HCFCD ROW; and
- Alternative 3B: Trapezoidal channel with reinforced concrete slope pavement anchored by permanent soil nails extending to the proposed 40-feet HCFCD ROW.

A geotechnical analysis was performed for the temporary excavations required during construction and is further discussed in Section 3.0. The design concepts are presented with additional detail in Section 4.0. Each feasible channel cross-section alternative was evaluated regarding hydraulic capacity, project cost, design life, maintenance, construction duration, and impact of construction activities as further discussed in Section 5.0. Evaluations included analyzing the alternatives using both a weighted factors method and a Pairwise method.

Using the weighted factors method to evaluate the five alternatives, Alternatives 3A and 3B were both

ranked the highest. Using the Pairwise method, Alternative 3B was ranked the highest with Alternative 3A as the second highest.

Alternative 3B was ranked high based upon the following:

- Decrease in WSELs when compared to both the Effective Model and Corrected Effective Model for all storm events;
- Lowest cost for the items associated with the design configuration; and
- Least impact of construction activities to nearby residences.

The most significant tradeoffs associated with this alternative when compared to others is that the desired HCFCD maintenance access along the channel is not feasible, the time of construction is longer than all other alternatives, the hydraulic benefits are not as great when compared to Alternative 3A, and the design life is slightly less than other alternatives.

Alternative 3A is similar in geometry to Alternative 3B but has a wider cross section with permanent soil nails utilizing the full 50-feet HCFCD ROW. The only difference in scoring was that this alternative had more of a significant impact of construction activities to nearby residences due to the extended soil nails; however, this alternative provided greater hydraulic benefits when compared to Alternative 3B, as it lowered WSELs by an additional 0.2 feet on average within the study reach.

For HCFCD to evaluate the implementation of either of these alternatives and coordinate with each of the cities, total project costs were developed for Alternatives 3A and 3B. A breakout of each total project cost is included as Appendix G. The total project costs for Alternatives 3A and 3B are $23,740,768 and $20,350,561, respectively. The following assumptions are noted:

- The Opinion of Probable Construction Costs (OPCCs) for Alternative 3A and 3B were determined to be $20,904,585 and $17,644,770, respectively. The OPCCs include a 30% contingency factor to account for:
    - Uncertainties associated with the contractor's care of water plan, as well as dealing with limited site access and staging opportunities; and
    - Adjusting, or working around, existing and proposed structures and facilities adjacent to the channel. Specific items already identified include a proposed concrete-lined swale feature within SSP, and an existing sanitary sewer lift station as well as a group of

maintenance boxes associated with ATT underground cables within WUP.

- The total engineering design fee, inclusive of FNI's contract as well as previous studies, was set equal to $2,000,000.00; and
- The anticipated construction management fees were set equal to 4 percent of the respective OPCCs.

On April 20, 2017, a meeting was held with HCFCD's Engineering Review Board (ERB) to consider the findings, existing conditions, conveyance, and encroachment issues identified during the preliminary engineering phase of the project. An additional objective of this meeting was to solicit concurrence for moving forward with the final design of Alternative 3B. At the conclusion of this meeting, the recommendation to move forward with the final design of Alternative 3B was unanimously approved by the ERB.

After establishing Alternative 3B as the preferred alternative, FNI performed a preliminary analysis at the request of HCFCD to determine if additional volume would be required in the Meyer Basin to mitigate the proposed channel improvements. The memorandum documenting this analysis is provided in Appendix I. While there are several variables which will impact final design and, ultimately, the final mitigation volume required, it is expected that the volume previously allocated within the Meyer Basin is adequate in mitigating the proposed channel improvements associated with Alternative 3B.

Based on the feedback received at the ERB meeting, as well as per subsequent direction given by HCFCD, the following items reflect activities that will be incorporated into the final design of Alternative 3B:

- Based on the anticipated needs of HCFCD's Infrastructure Department, incorporate at least two permanent maintenance access points;
- Incorporate provisions for public safety and deterrence of trespassing along the project reach; and
- Perform an expanded Impact Analysis to include:
    - Development of a detailed steady state hydraulic model which incorporates topographic survey data to reflect the current channel condition;
    - An evaluation of Brays Bayou backwater conditions for the Current Effective and Brays

Bayou Conditional Letter of Map Revision (CLOMR) modeling;

- Development of an unsteady state hydraulic model to evaluate potential for increases in flows and WSE downstream of the project reach; and
- An evaluation of potential impacts to storm sewer outfalls downstream of the project reach.

At the request of HCFCD's stormwater quality department, FNI evaluated the feasibility of implementing water quality enhancements along the project reach. FNI specifically consulted the document entitled, "HCFCD Water Quality Enhancement Section for Preliminary Engineering Report (PER) or Project Design Report (PDR)" to determine its applicability to the content presented in this PER. It was determined by HCFCD and FNI project team members that the project reach does not have sufficient opportunities for water quality enhancements. It was further concluded that such enhancements would not be required along the project reach given:

- The total footprint of impervious cover is not being increased by more than one acre from its current condition; and
- The project reach is not located within unincorporated Harris County or the City of Houston.

During final design, the project team will coordinate with SSP and WUP as appropriate to verify that the cities will not require specific provisions for water quality enhancements.

The outline of the PER is summarized as follows:

- Section 1.0 – Introduction
- Section 2.0 – Existing Conditions
- Section 3.0 – Temporary Excavations
- Section 4.0 – Channel Design Alternatives
- Section 5.0 – Evaluation of Alternatives
- Section 6.0 – Summary and Recommendation

Attachment 1

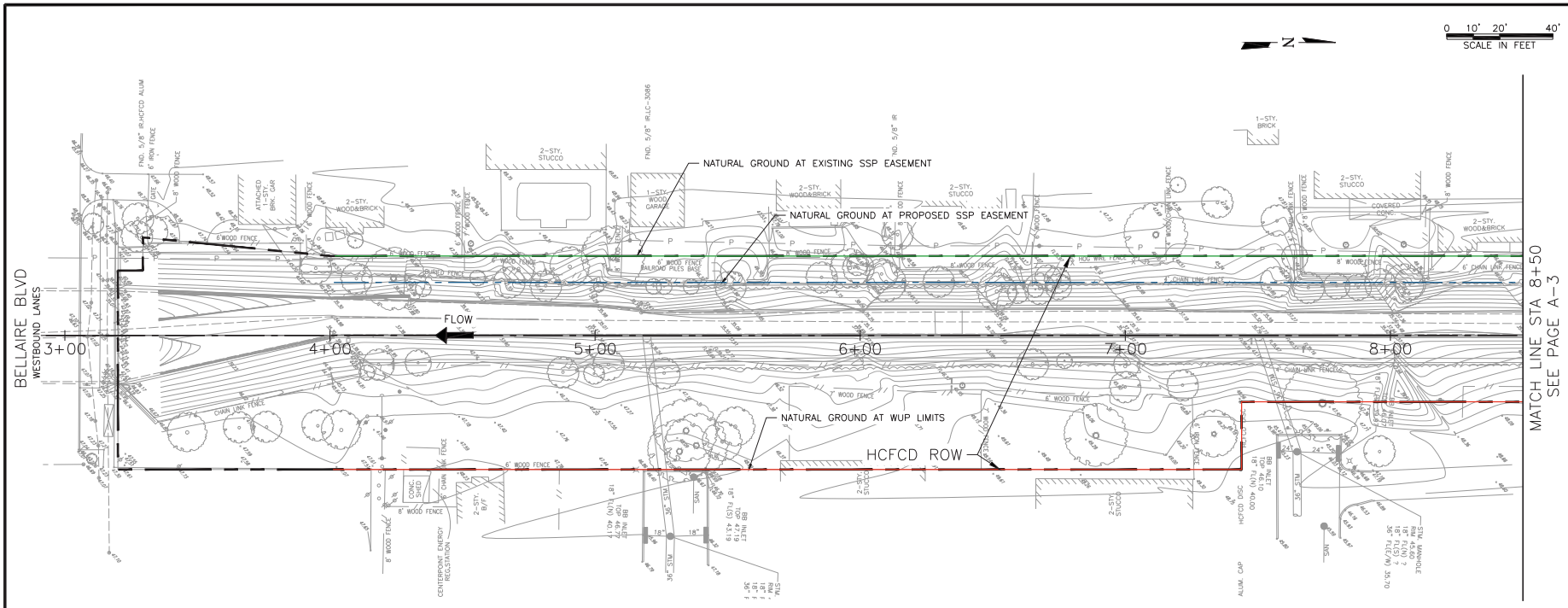

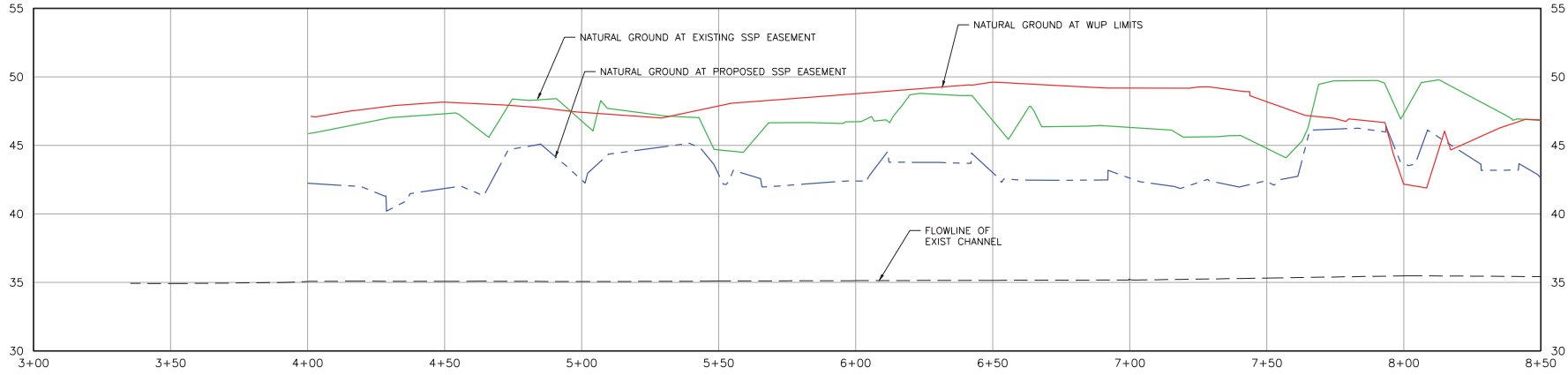

NOT FOR CONSTRUCTION

THIS DOCUMENT IS RELEASED FOR THE PURPOSE OF INTERIM REVIEW UNDER THE AUTHORITY OF KALLI K. CLARK-EGAN P.E. TEXAS NO: 122407 ON DATE: 12/16/2016 IT IS NOT TO BE USED FOR CONSTRUCTION, BIDDING OR PERMIT PURPOSES.

REV	DESCRIPTION	DATE	APPR

APPENDIX A

POOR FARM DITCH IMPROVEMENTS
HARRIS COUNTY FLOOD CONTROL

EXISTING PLAN AND PROFILE

PREPARED:
CHECKED:
APPROVED:

FREESE AND NICHOLS
10497 Town and Country Way,
Suite 600
Houston, Texas 77024
Phone – (713) 600-6800
Fax – (713) 600-6801

HARRIS COUNTY FLOOD CONTROL DISTRICT
9900 Northwest Freeway
Houston, Texas 77092

DATE: DECEMBER 2016
SCALE: AS SHOWN

PAGE
A–2

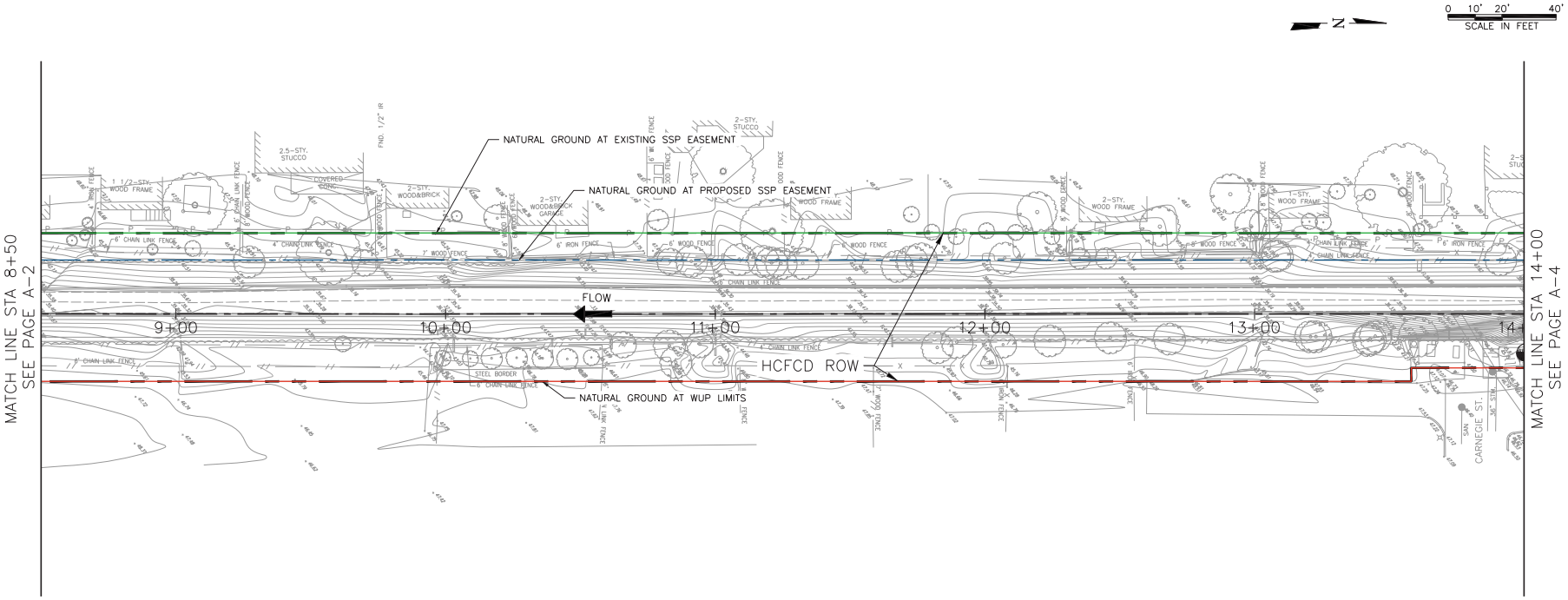

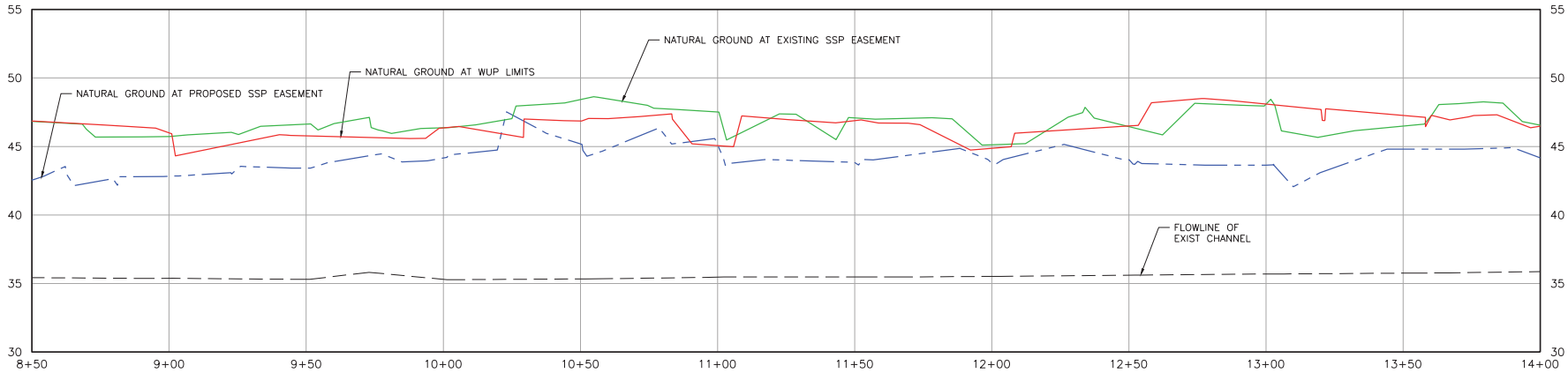

NOT FOR CONSTRUCTION

THIS DOCUMENT IS RELEASED FOR THE PURPOSE OF INTERIM REVIEW UNDER THE AUTHORITY OF KALU K. CLARK-EGAN P.E. TEXAS NO: 122407 ON DATE: 12/16/2016 IT IS NOT TO BE USED FOR CONSTRUCTION, BIDDING OR PERMIT PURPOSES.

REV	DESCRIPTION	DATE	APPR

APPENDIX A

POOR FARM DITCH IMPROVEMENTS
HARRIS COUNTY FLOOD CONTROL

EXISTING PLAN AND PROFILE

PREPARED:
CHECKED:
APPROVED:

FREESE AND NICHOLS
10497 Town and Country Way,
Suite 600
Houston, Texas 77024
Phone – (713) 600-6800
Fax – (713) 600-6801

HARRIS COUNTY FLOOD CONTROL DISTRICT
9900 Northwest Freeway
Houston, Texas 77092

DATE: DECEMBER 2016
SCALE: AS SHOWN

PAGE
A-3

ACAD Rel 19.0s (LMS Tech) User: 02462
[HCF15148][N:\STANDARD\HCFCD BORDER GENERAL.DWG LAYOUT: Model
02/25/2016 8:39:51 A.M. LTS: 1.00 PSLTS: 1
REFERENCE FILE: 97253
Date: Dec 13, 2016 – 9:17am User: 02462 File: N:\WRD\Exhibits\2016-3-29\HCFCD_Design_Concept.dwg

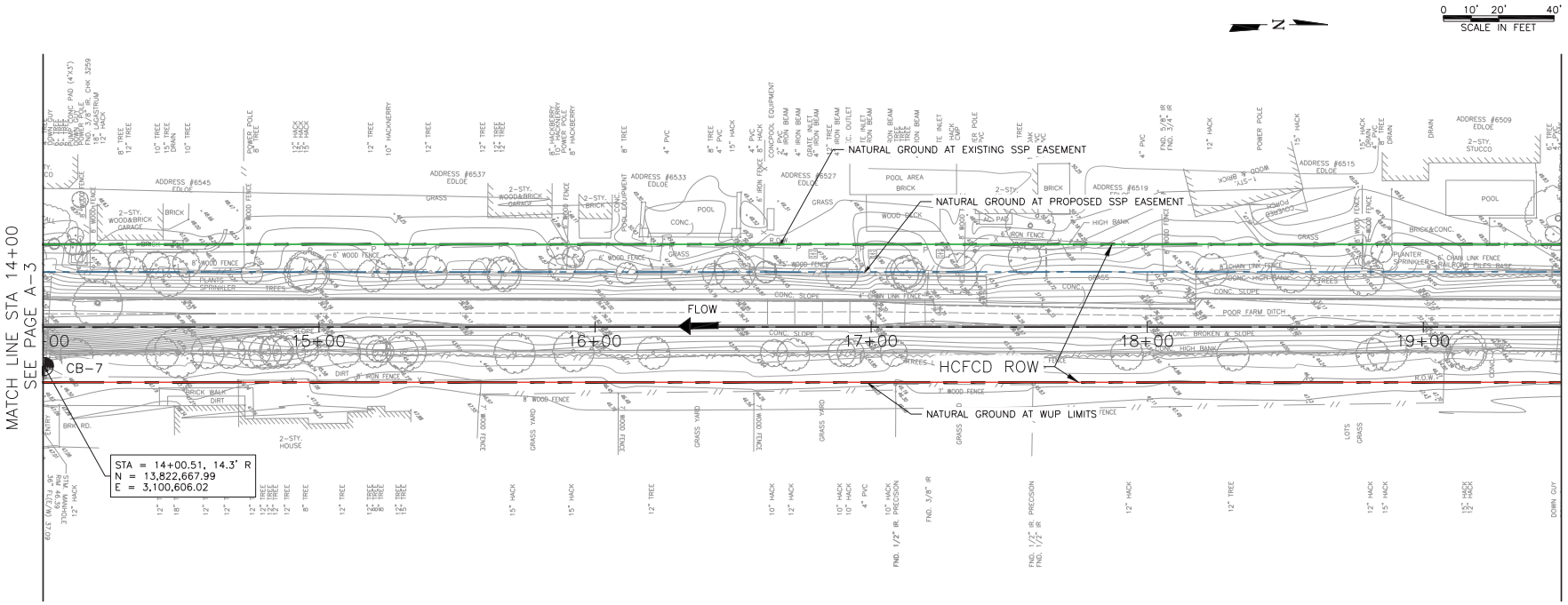

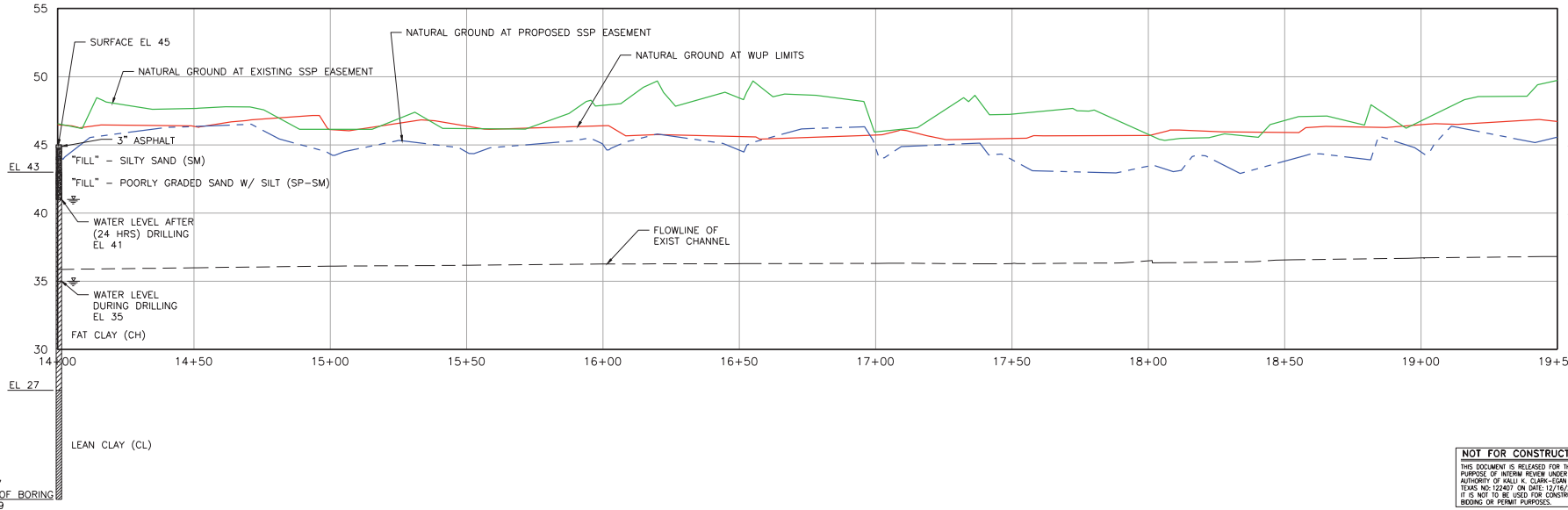

NOT FOR CONSTRUCTION

THIS DOCUMENT IS RELEASED FOR THE PURPOSE OF INTERIM REVIEW UNDER THE AUTHORITY OF KALLI K. CLARK-EGAN P.E. TEXAS NO. 122407 ON DATE: 12/16/2016 IT IS NOT TO BE USED FOR CONSTRUCTION, BIDDING OR PERMIT PURPOSES.

REV	DESCRIPTION	DATE	APPR

APPENDIX A

POOR FARM DITCH IMPROVEMENTS
HARRIS COUNTY FLOOD CONTROL

EXISTING PLAN AND PROFILE

PREPARED:
CHECKED:
APPROVED:

FREESE AND NICHOLS
10497 Town and Country Way,
Suite 600
Houston, Texas 77024
Phone - (713) 600-6800
Fax - (713) 600-8801

HARRIS COUNTY FLOOD CONTROL DISTRICT
9900 Northwest Freeway
Houston, Texas 77092

DATE: DECEMBER 2016
SCALE: AS SHOWN

PAGE
A-4

ACAD Rel 19.0s (LMS Tech) User: 02462
[HCF15148][N:\STANDARD\HCFCD BORDER GENERAL.DWG LAYOUT: Model
02/25/2016 8:39:51 A.M. LTS: 1.00 PSLTS: 1
REFERENCE FILE: 97253
Date: Dec 13, 2016 - 9:17am User: 02462 File: N:\WRD\Exhibits\2016-3-29\HCFCD_Design_Concept.dwg

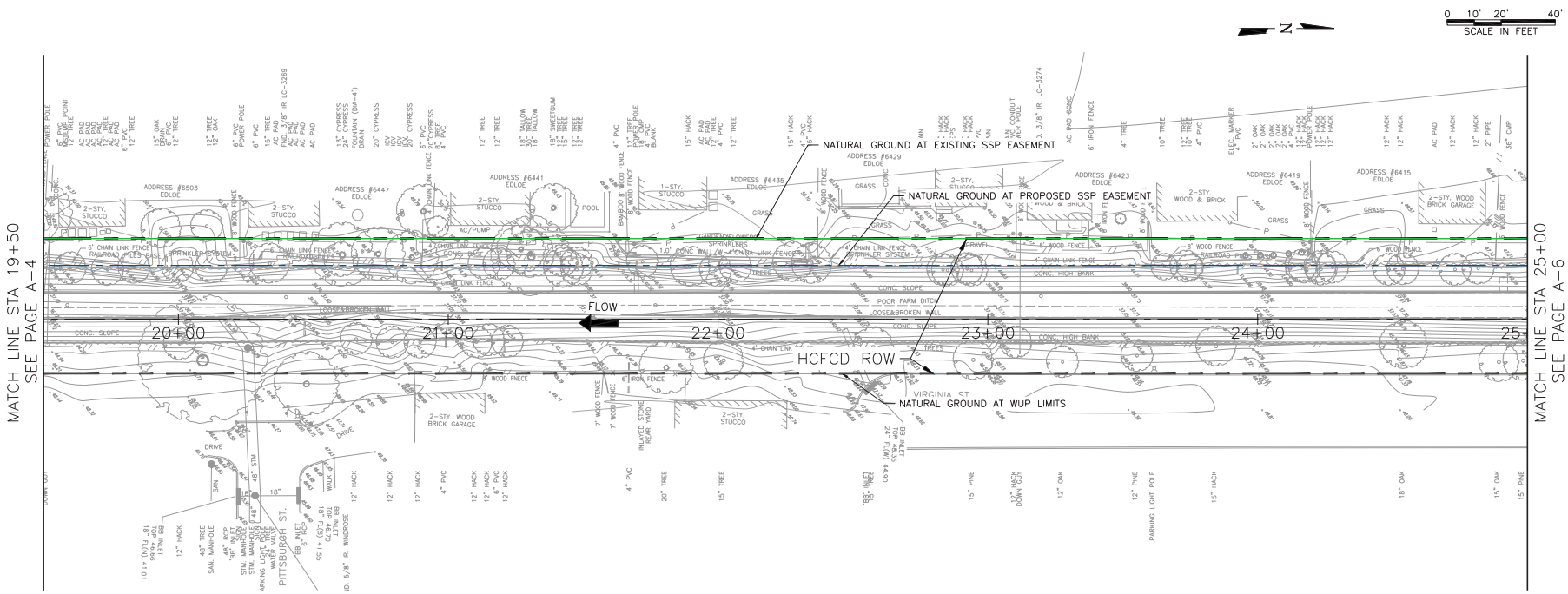

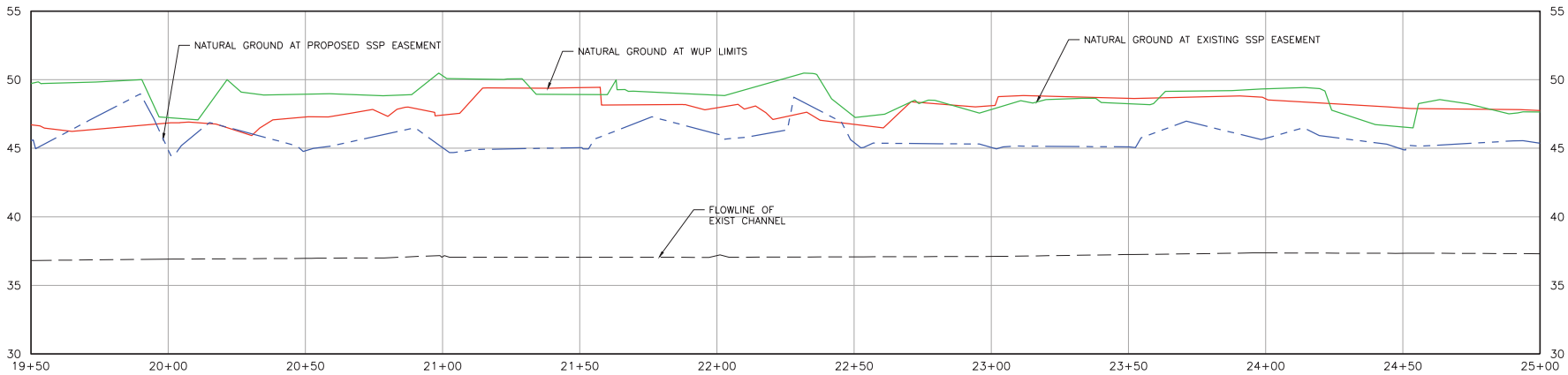

NOT FOR CONSTRUCTION

THIS DOCUMENT IS RELEASED FOR THE PURPOSE OF INTERIM REVIEW UNDER THE AUTHORITY OF KALLI K. CLARK-EGAN P.E. TEXAS NO. 122407 ON DATE: 12/16/2016 IT IS NOT TO BE USED FOR CONSTRUCTION, BIDDING OR PERMIT PURPOSES.

REV	DESCRIPTION	DATE	APPR

APPENDIX A

POOR FARM DITCH IMPROVEMENTS
HARRIS COUNTY FLOOD CONTROL

EXISTING PLAN AND PROFILE

PREPARED:
CHECKED:
APPROVED:

FREESE AND NICHOLS
10497 Town and Country Way,
Suite 600
Houston, Texas 77024
Phone – (713) 600-6800
Fax – (713) 600-6801

HARRIS COUNTY FLOOD CONTROL DISTRICT
9900 Northwest Freeway
Houston, Texas 77092

DATE: DECEMBER 2016
SCALE: AS SHOWN

PAGE
A–5

ACAD Rel 19.0s (LMS Tech) User: 02462
[HCF15148][N:\STANDARD\HCFCD BORDER GENERAL.DWG LAYOUT: Model
02/25/2016 8:39:51 A.M. LTS: 1.00 PSLTS: 1
REFERENCE FILE: 97253
Date: Dec 13, 2016 – 9:17am User: 02462 File: N:\WRD\Exhibits\2016-3-29\HCFCD_Design_Concept.dwg

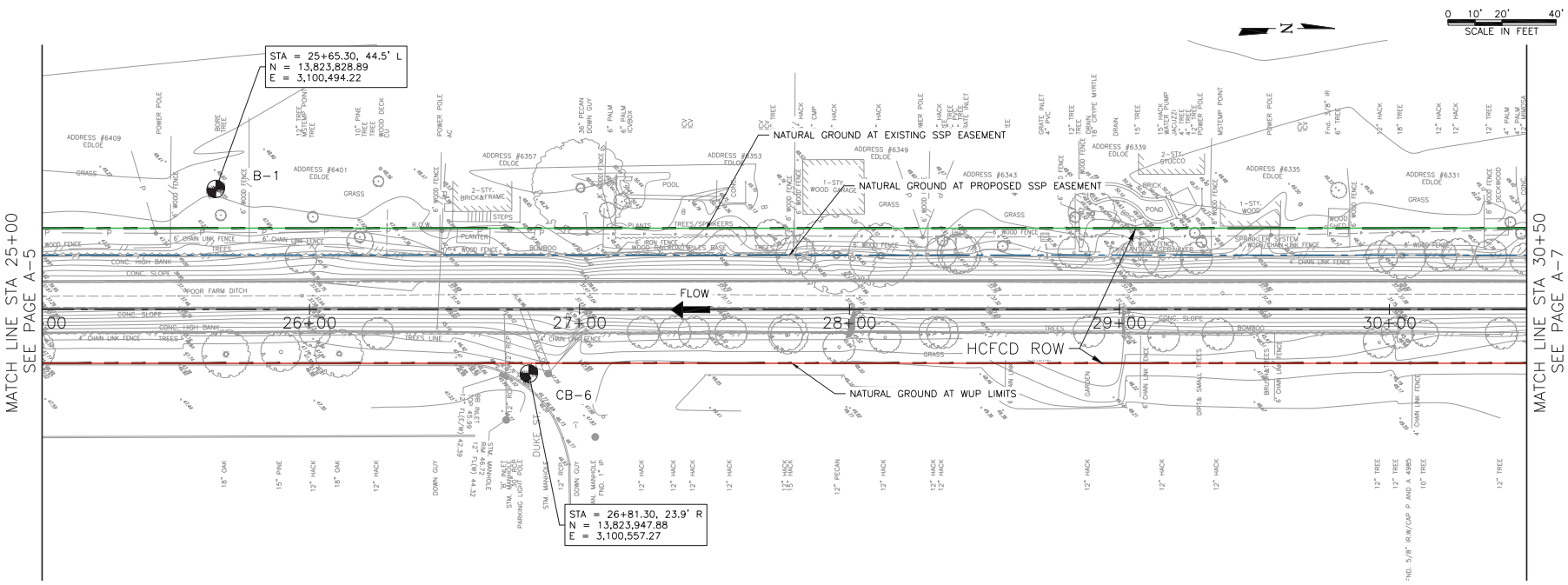

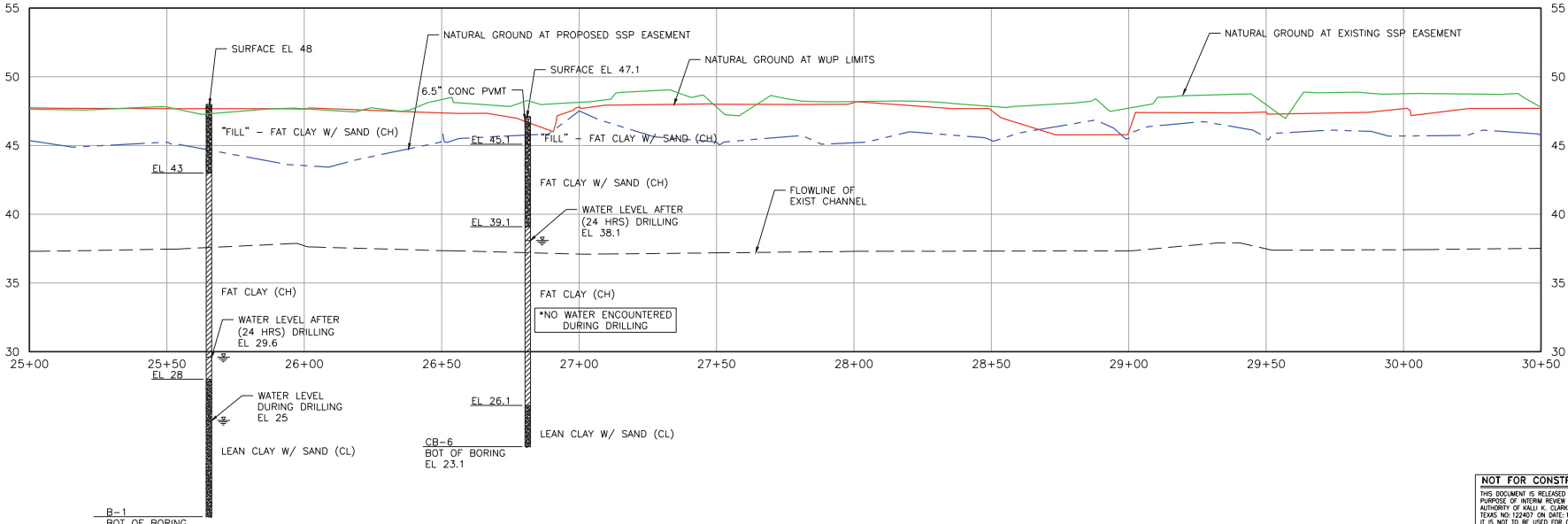

NOT FOR CONSTRUCTION

THIS DOCUMENT IS RELEASED FOR THE PURPOSE OF INTERIM REVIEW UNDER THE AUTHORITY OF KALLI K. CLARK-EGAN P.E. TEXAS NO: 122407 ON DATE: 12/16/2016 IT IS NOT TO BE USED FOR CONSTRUCTION, BIDDING OR PERMIT PURPOSES.

REV	DESCRIPTION	DATE	APPR

APPENDIX A

POOR FARM DITCH IMPROVEMENTS
HARRIS COUNTY FLOOD CONTROL

EXISTING PLAN AND PROFILE

PREPARED:
CHECKED:
APPROVED:

FREESE AND NICHOLS
10497 Town and Country Way,
Suite 600
Houston, Texas 77024
Phone - (713) 600-6800
Fax - (713) 600-6801

HARRIS COUNTY FLOOD CONTROL DISTRICT
9900 Northwest Freeway
Houston, Texas 77092

DATE: DECEMBER 2016
SCALE: AS SHOWN

PAGE
A-6

ACAD Rel 19.0s (LMS Tech) User: 02462
[HCF15148][N:\STANDARD\HCFCD BORDER GENERAL.DWG LAYOUT: Model
02/25/2016 8:39:51 A.M. LTS: 1.00 PSLTS: 1
REFERENCE FILE: 97253

Date: Dec 13, 2016 - 9:18am User: 02462 File: N:\WRD\Exhibits\2016-3-29\HCFCD_Design_Concept.dwg

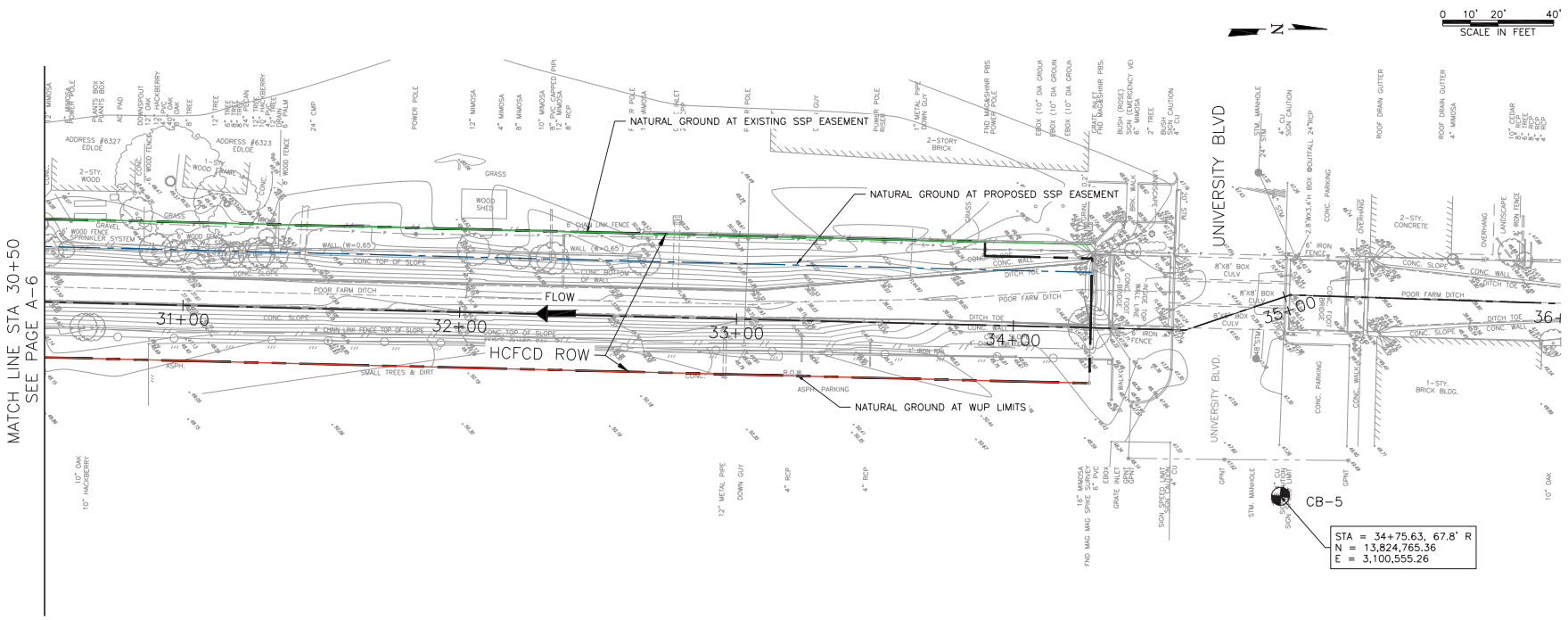

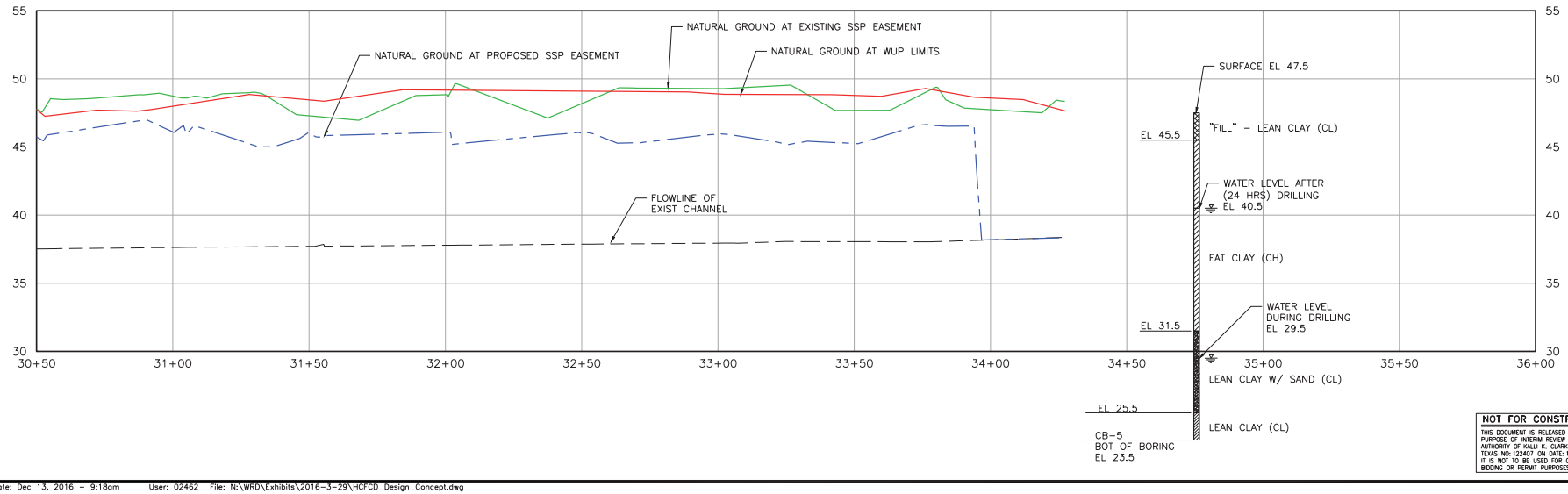

NOT FOR CONSTRUCTION

THIS DOCUMENT IS RELEASED FOR THE PURPOSE OF INTERIM REVIEW UNDER THE AUTHORITY OF KALU K. CLARK-EGAN P.E. TEXAS NO: 122407 ON DATE: 12/16/2016 IT IS NOT TO BE USED FOR CONSTRUCTION, BIDDING OR PERMIT PURPOSES.

REV	DESCRIPTION	DATE	APPR

APPENDIX A

POOR FARM DITCH IMPROVEMENTS
HARRIS COUNTY FLOOD CONTROL

EXISTING PLAN AND PROFILE

PREPARED:
CHECKED:
APPROVED:

FREESE AND NICHOLS
10497 Town and Country Way, Suite 600
Houston, Texas 77024
Phone - (713) 600-6800
Fax - (713) 600-6801

HARRIS COUNTY FLOOD CONTROL DISTRICT
9900 Northwest Freeway
Houston, Texas 77092

DATE: DECEMBER 2016
SCALE: AS SHOWN

PAGE
A-7

ACAD Rel 19.0s (LMS Tech) User: 02462
[HCF15148][N:\STANDARD\HCFCD BORDER GENERAL.DWG LAYOUT: Model
02/25/2016 8:39:51 A.M. LTS: 1.00 PSLTS: 1
REFERENCE FILE: 97253

Date: Dec 13, 2016 - 9:18am User: 02462 File: N:\WRD\Exhibits\2016-3-29\HCFCD_Design_Concept.dwg

Attachment 2

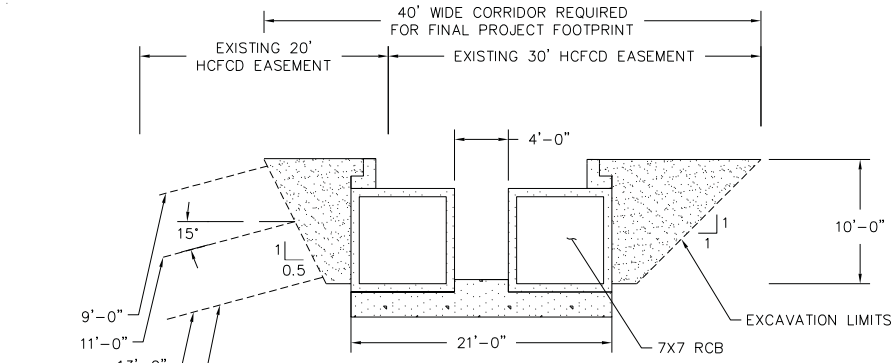

1A ALTERNATIVE
1"=10'

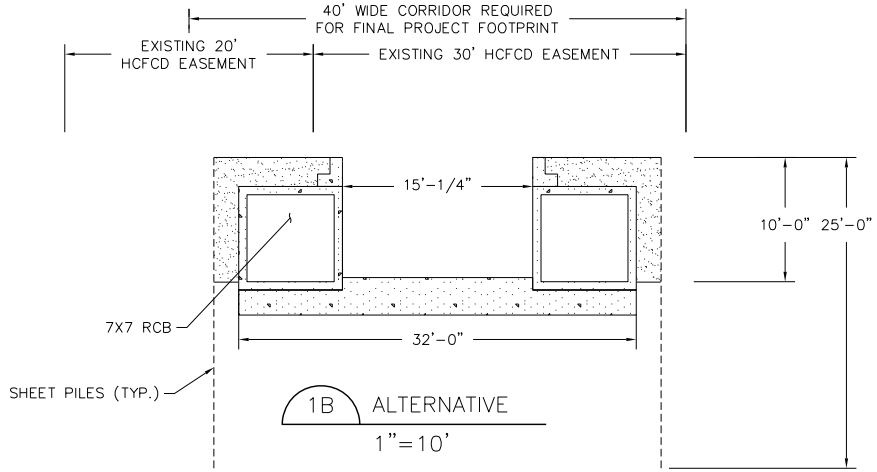

1B ALTERNATIVE
1"=10'

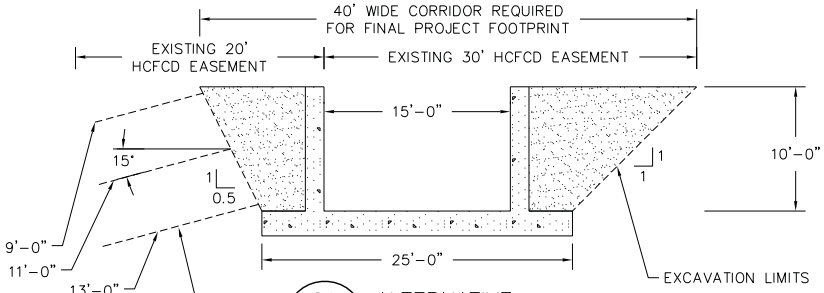

2A ALTERNATIVE
1"=10'

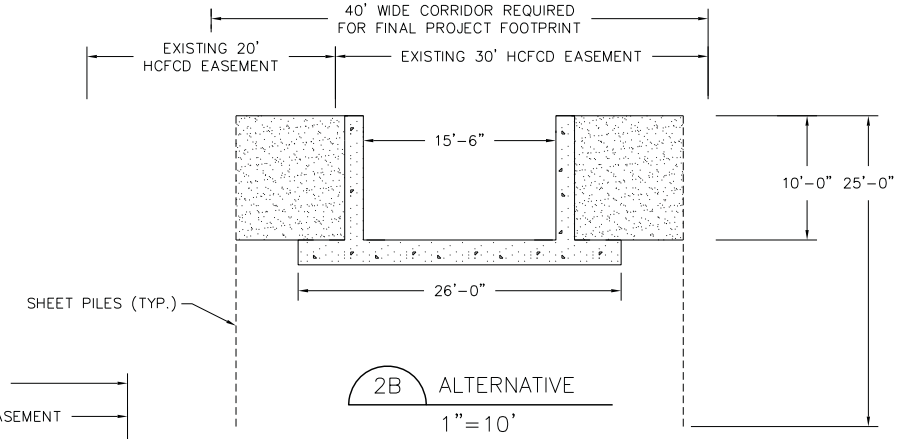

2B ALTERNATIVE
1"=10'

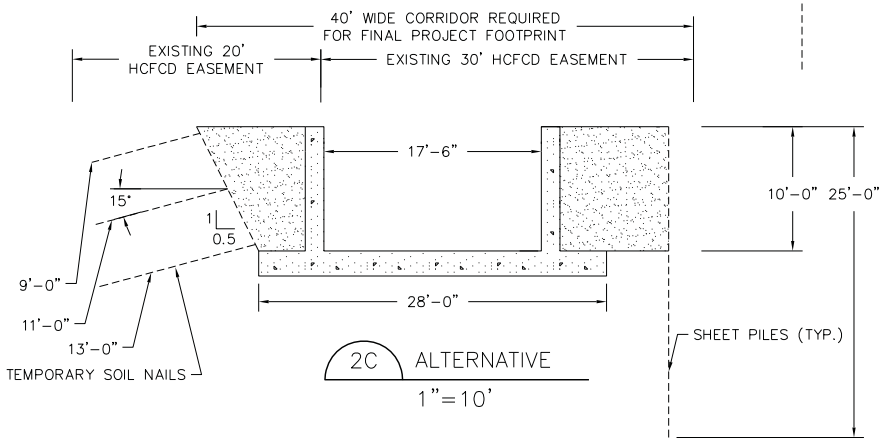

2C ALTERNATIVE
1"=10'

NOTE:

1. ALTHOUGH SOIL HEIGHTS VARY IN DEPTH, SOIL NAIL PLACEMENT EVALUATED ON A CUT DEPTH OF 11 FEET. REFERENCE ANALYSIS INCLUDED IN PER.
2. TEMPORARY SOIL NAILS SHOWN SPACED 4 FEET CENTER TO CENTER ALONG THE LENGTH OF CHANNEL.

NOT FOR CONSTRUCTION

THIS DOCUMENT IS RELEASED FOR THE PURPOSE OF INTERIM REVIEW UNDER THE AUTHORITY OF KALU K. CLARK-EGAN P.E. TEXAS NO: 122407 ON DATE: 12/16/2016 IT IS NOT TO BE USED FOR CONSTRUCTION, BIDDING OR PERMIT PURPOSES.

REV	DESCRIPTION	DATE	APPR

APPENDIX D

POOR FARM DITCH IMPROVEMENTS
HARRIS COUNTY FLOOD CONTROL

DESIGN ALTERNATIVES
TYPICAL SECTIONS

PREPARED:
CHECKED:
APPROVED:

FREESE AND NICHOLS
10497 Town and Country Way,
Suite 600
Houston, Texas 77024
Phone – (713) 600-6800
Fax – (713) 600-6801

HARRIS COUNTY FLOOD CONTROL DISTRICT
9900 Northwest Freeway
Houston, Texas 77092

DATE: DECEMBER 2016
SCALE: AS SHOWN

ACAD Rel 19.0s (LMS Tech) User: 02462
[HCF15148]N:\STANDARD\HCFCD BORDER GENERAL.DWG LAYOUT: Model
02/25/2016 8:39:51 A.M. LTS: 1.00 PSLTS: 1
REFERENCE FILE: 97235

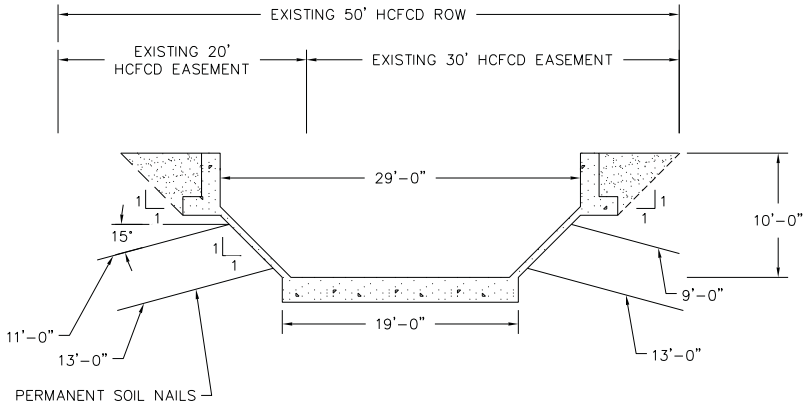

3A ALTERNATIVE

1"=10'

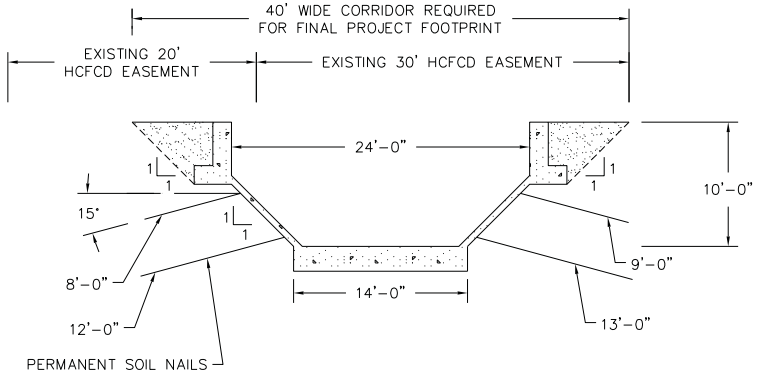

3B ALTERNATIVE

1"=10'

NOTE:

1. FOR PERMANENT SOIL NAIL PLACEMENT, REFERENCE ANALYSIS INCLUDED IN PER.
2. PERMANENT SOIL NAILS SHOWN SPACED 2 FEET CENTER TO CENTER ALONG THE LENGTH OF CHANNEL.

NOT FOR CONSTRUCTION

THIS DOCUMENT IS RELEASED FOR THE PURPOSE OF INTERIM REVIEW UNDER THE AUTHORITY OF KALU K. CLARK-EGAN P.E. TEXAS NO. 122407 ON DATE: 12/16/2016 IT IS NOT TO BE USED FOR CONSTRUCTION, BIDDING OR PERMIT PURPOSES.

REV	DESCRIPTION	DATE	APPR

APPENDIX D

POOR FARM DITCH IMPROVEMENTS

HARRIS COUNTY FLOOD CONTROL

DESIGN ALTERNATIVES
TYPICAL SECTIONS

PREPARED:

CHECKED:

APPROVED:

FREESE AND NICHOLS
10497 Town and Country Way, Suite 600
Houston, Texas 77024
Phone – (713) 600-6800
Fax – (713) 600-6801

HARRIS COUNTY FLOOD CONTROL DISTRICT
9900 Northwest Freeway
Houston, Texas 77092

DATE: DECEMBER 2016
SCALE: AS SHOWN

ACAD Rel 19.0s (LMS Tech) User: 02462
[HCF15148]N:\STANDARD\HCFCD BORDER GENERAL.DWG LAYOUT: Model
02/25/2016 8:39:51 A.M. LTS: 1.00 PSLTS: 1
REFERENCE FILE: 97235

Date: Apr 13, 2017 – 12:25pm User: 02163 File: N:\WRD\Exhibits\2016-3-29\HCFCD_Design_Concept-X SECTIONS.dwg